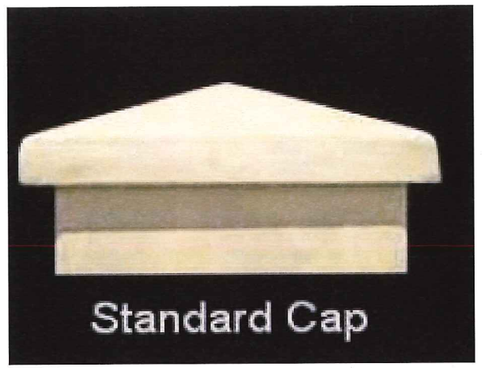

PermaSand Stucco Finish

GENERAL NOTES:

CODES AND STANDARDS

* STRUCTURAL DESIGN BASED ON THE 2010 FLORIDA BUILDING CODE (FBC).
* MINIMUM DESIGN LOADS FOR BUILDINGS & OTHER STRUCTURES ASCE 7
* BUILDING CODE REQUIREMENTS FOR STRUCTURAL CONCRETE ACI 318

DESIGN

* WIND SPEED = ___ MPH (3sec Gust)
* EXPOSURE - ___
* Kd = 0.85
* F.S.(Overturning) = 1.5
* CONSTRUCTION TYPE - I or II (noncombustible materials)

SOIL

* MINIMUM SOIL WEIGHT OF 110 PCF
* SOIL FRICTION ANGLE OF 30 DEGREES
* ALLOWABLE BEARING CAPACITY = 2,000 PSF
* BLOWS / FOOT N = 6

REINFORCING STEEL

* DEFORMED REINFORCING BARS PER ASTM A615 GRADE 60.
* #3 STIRRUPS PER ASTM A615 GRADE 40.
* WELDED WIRE FABRIC PER ASTM A185 - MINIMUM LAP OF TWO SQUARES.

CONCRETE

* MINIMUM 28 DAY COMPRESSIVE STRENGTH OF PRECAST ELEMENTS F'c=5000psi
* MINIMUM 28 DAY COMPRESSIVE STRENGTH OF CAST IN PLACE CONCRETE F'c=3000psi
* CEMENT PER ASTM C-150 TYPE 1
* NORMAL WEIGHT AGGREGATE: FINE AND COARSE AGGREGATE MEETING ASTM C33. MAXIMUM AGGREGATE SIZE OF 3/4".
* PROHIBITED ADMIXTURES: CALCIUM CHLORIDE, THIOCYANATE OR ADMIXTURES CONTAINING MORE THAN 0.05 PERCENT CHLORIDE IONS ARE NOT PERMITTED. NO ADMIXTURE SHALL CAUSE AN INCREASE IN SHRINKAGE WHEN TESTED IN ACCORDANCE WITH ASTM C494 AND C157.
* MINIMUM CONCRETE COVERAGE FOR REINFORCEMENT SHALL BE AS FOLLOWS:

PRECAST PANELS	3/4"
PRECAST POSTS	1-1/4" (#3 - #5 REBAR)
PRECAST POSTS	1-1/2" (#6 AND LARGER REBAR)

* DISCHARGE OF THE CONCRETE SHALL BE COMPLETED WITHIN 1-1/2 HOURS OR BEFORE THE DRUM HAS REVOLVED 300 REVOLUTIONS, WHICHEVER COMES FIRST, AFTER THE INTRODUCTION OF THE MIXING WATER TO THE CEMENT AND AGGREGATES OR THE INTRODUCTION OF THE CEMENT TO THE AGGREGATES.
* WATER SHALL NOT BE ADDED IN THE FIELD UNLESS APPROVED BY ENGINEER .

SURFACE FINISH

* THESE DRAWINGS DO NOT ADDRESS SURFACE FINISH OF THE PRECAST WALL OR ANY PRECAST ELEMENTS. ALL FINISHES ARE ASSUMED TO BE GRAY CONCRETE. ANY FINISHES SHALL BE BY OTHERS OR UNDER SEPARATE SPECIFICATIONS.

UTILITIES

* THE LOCATION OF ALL OVERHEAD AND UNDERGROUND UTILITIES SHALL BE PROVIDED BY THE GENERAL CONTRACTOR BEFORE APPROVAL OF DRAWINGS.

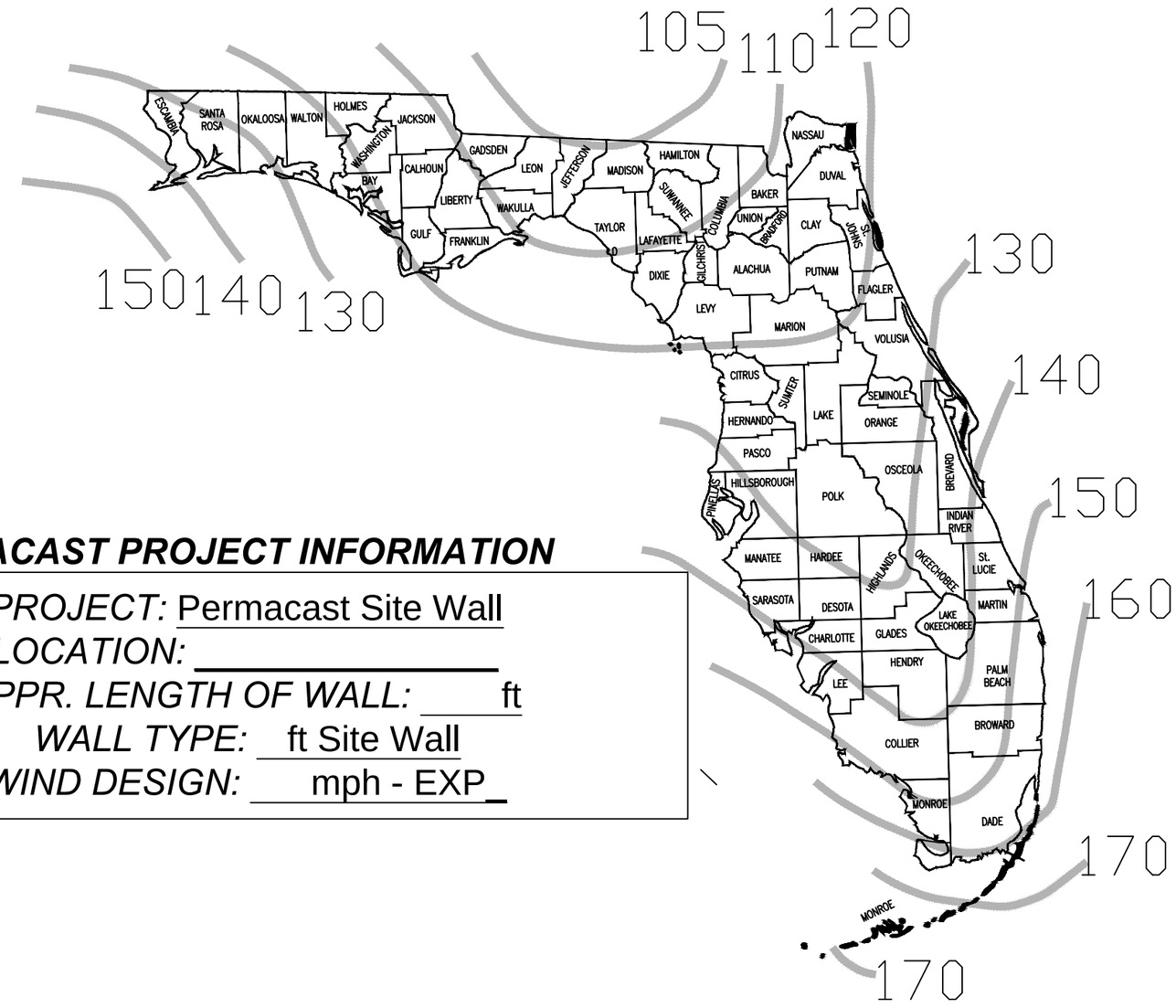

PERMACAST PROJECT INFORMATION

PROJECT: Permacast Site Wall
LOCATION: _____
APPR. LENGTH OF WALL: ____ft
WALL TYPE: ft Site Wall
WIND DESIGN: ___mph - EXP_

To the best of my knowledge, these drawings conform to the structural requirements of the 2010 Florida Building Code .

FOR APPROVAL NOT FOR CONSTRUCTION

Revisions

1	
2	
3	

Florida Engineering Solutions
Today's Ideas * Tomorrow's Results
C.A. No. 26300 - 12620 Curley St. - Suite 105 - San Antonio, FL 33576
Ph: 352 / 588 - 5311 Fx: 352 / 588 - 5411 www.florida-engineer.com

PERMACAST PRECAST CONCRETE FENCE
6015 21st Street East
Bradenton, Florida
Ph: 941 / 256 - 6087
www.permacastwalls.com

Permacast Site Wall

DWG BY:	CHK:	Drawing 1 OF 7
DATE:	JOB NO.	

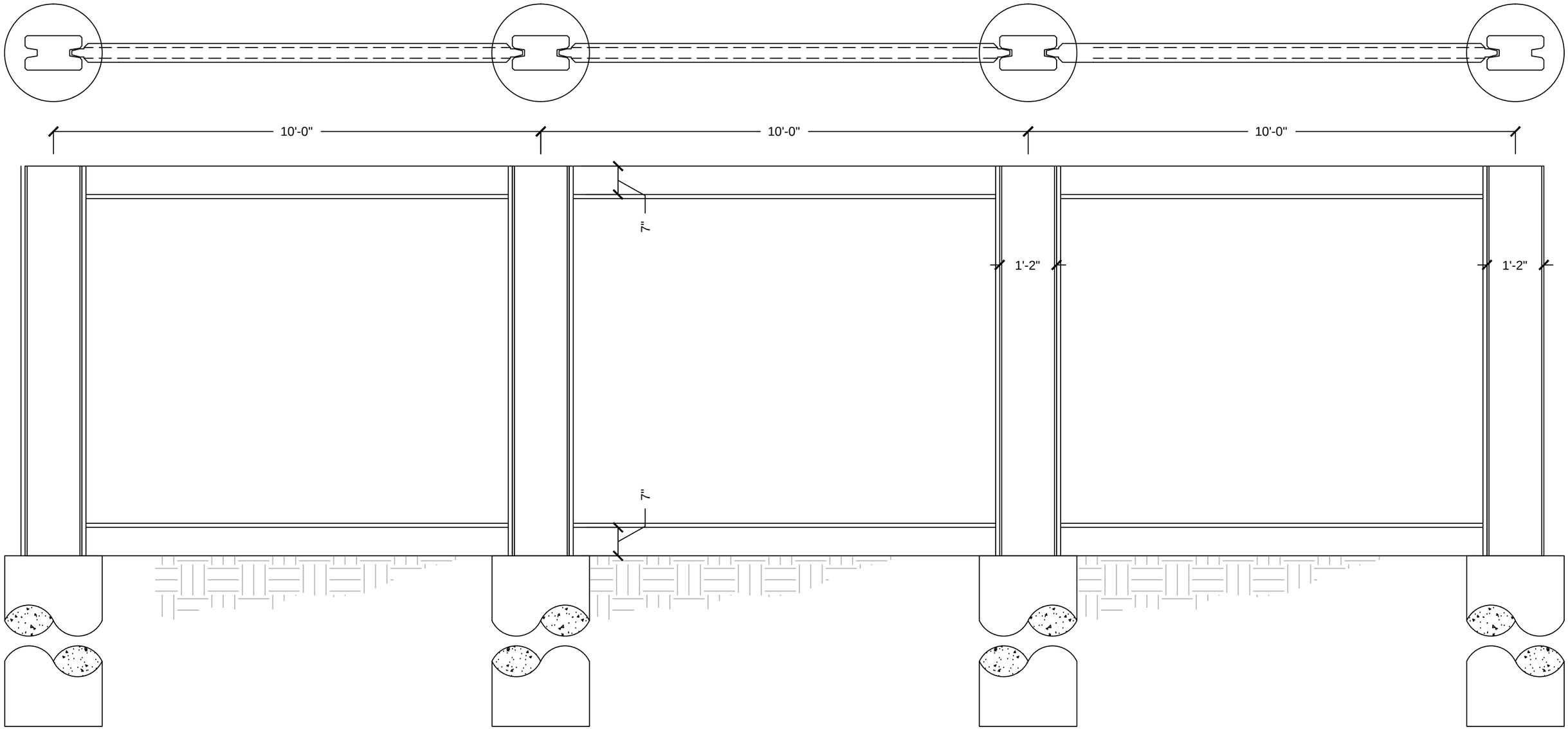

TYPICAL WALL ELEVATION

SCALE: 1/2" = 1'-0"

To the best of my knowledge, these drawings conform to the structural requirements of the 2010 Florida Building Code .

FOR APPROVAL NOT FOR CONSTRUCTION

Revisions	
1	
2	
3	

Florida Engineering Solutions
Today's Ideas * Tomorrow's Results
C.A. No. 26300 - 12620 Curley St. - Suite 105 - San Antonio, FL 33576
Ph: 352 / 588 - 5311 Fx: 352 / 588 - 5411 www.florida-engineer.com

PERMACAST PRECAST CONCRETE FENCE
6015 21st Street East
Bradenton, Florida
Ph: 941 / 256 - 6087
www.permacastwalls.com

Permacast Site Wall

DWG BY:	CHK:	Drawing
DATE:	JOB NO.	2 OF 7

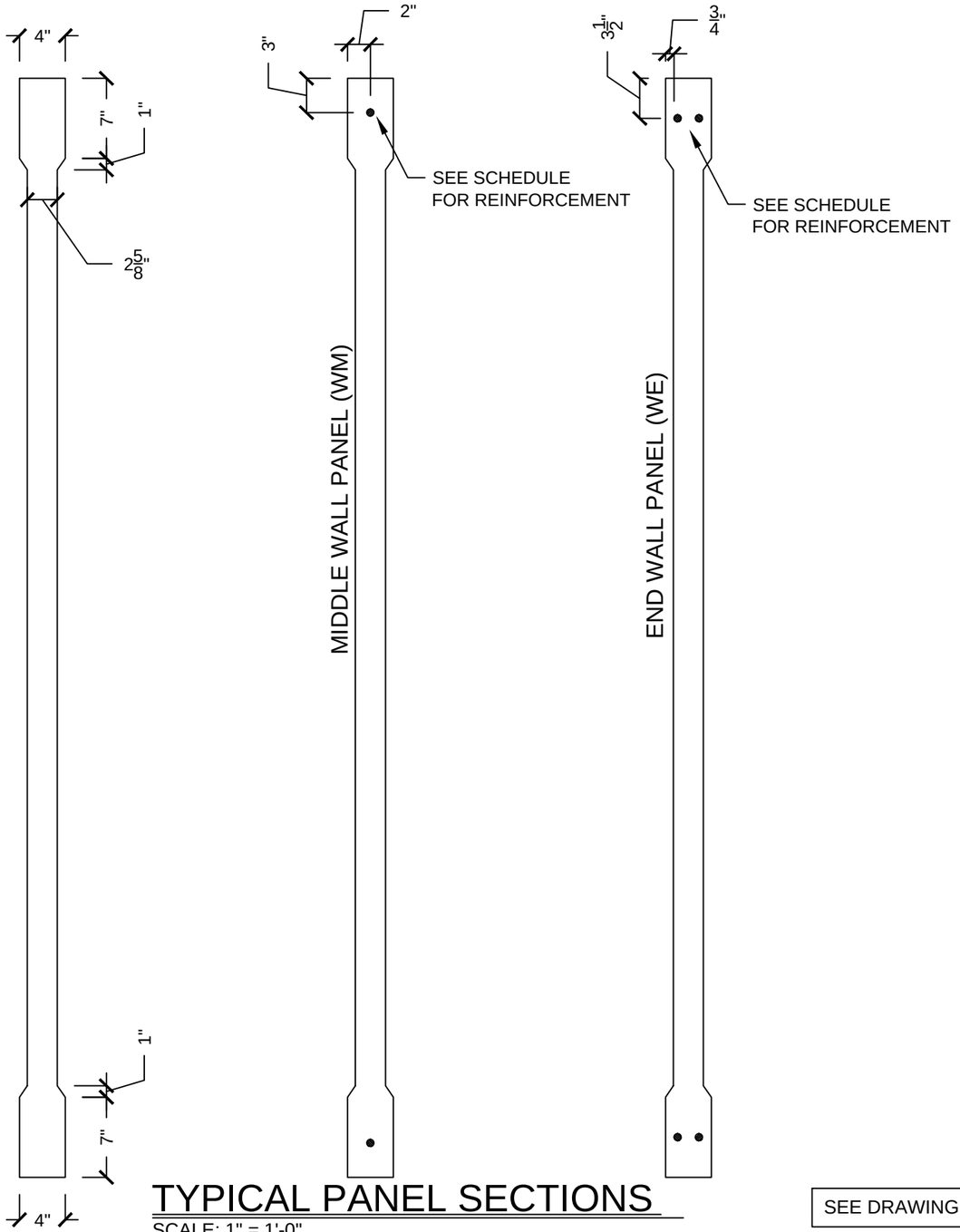

TYPICAL PANEL SECTIONS

SCALE: 1" = 1'-0"

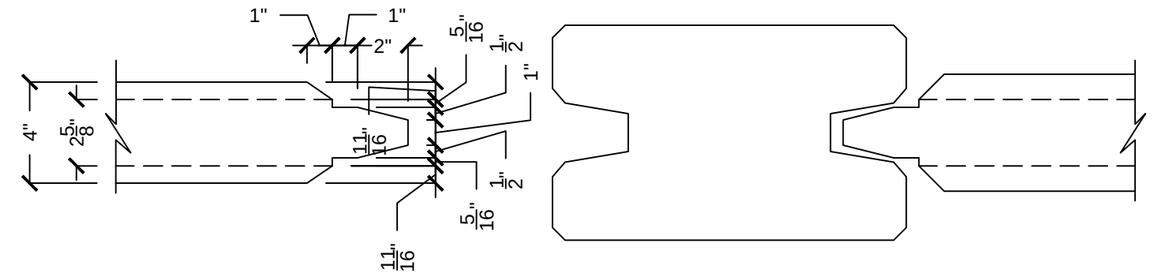

TYPICAL PANEL / POST CONNECTION

SCALE: 2" = 1'-0"

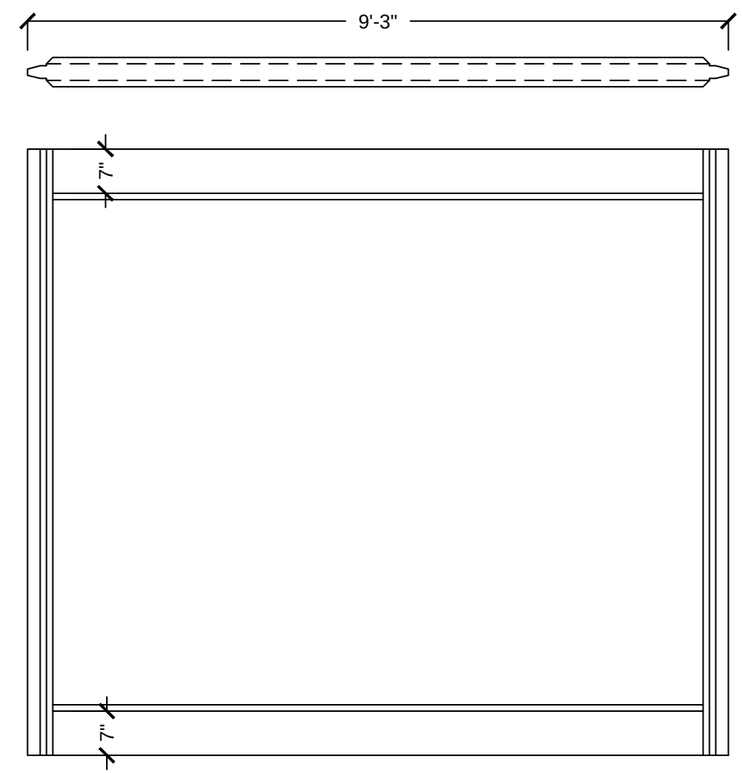

TYPICAL PANEL ELEVATION

SCALE: 1" = 1'-0"

SEE DRAWING 7 FOR MIDDLE AND END WALL PANEL LAYOUT

To the best of my knowledge, these drawings conform to the structural requirements of the 2010 Florida Building Code .

FOR APPROVAL NOT FOR CONSTRUCTION

Revisions

1	
2	
3	

Florida Engineering Solutions
Today's Ideas * Tomorrow's Results
C.A. No. 26300 - 12620 Curley St. - Suite 105 - San Antonio, FL 33576
Ph: 352 / 588 - 5311 Fx: 352 / 588 - 5411 www.florida-engineer.com

PERMACAST PRECAST CONCRETE FENCE
6015 21st Street East
Bradenton, Florida
Ph: 941 / 256 - 6087
www.permacastwalls.com

Permacast Site Wall

DWG BY:	CHK:	Drawing 3 OF 7
DATE:	JOB NO.	

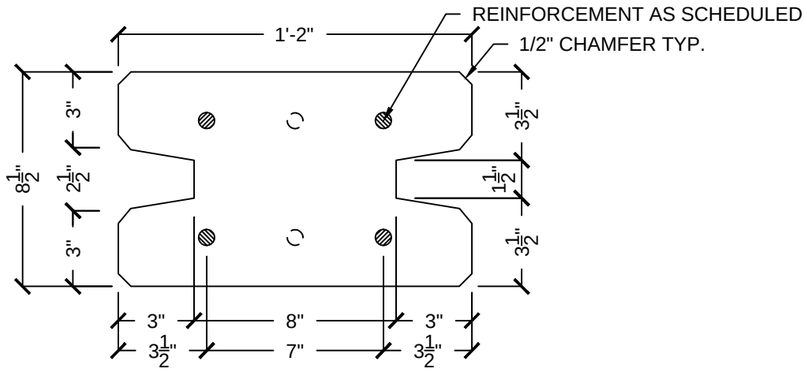

LINE POST DETAIL

SCALE: 2" = 1'-0"

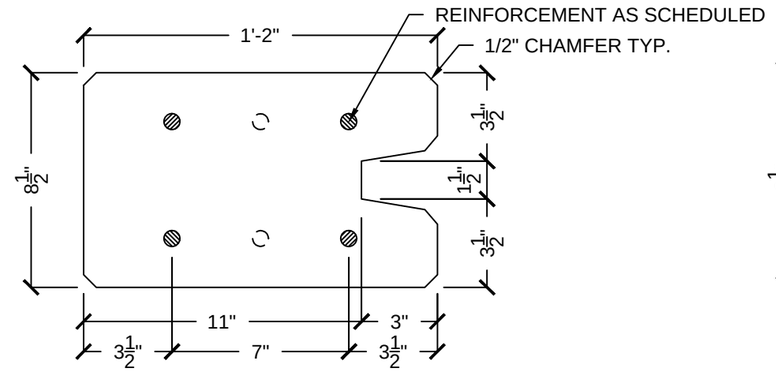

END POST DETAIL

SCALE: 2" = 1'-0"

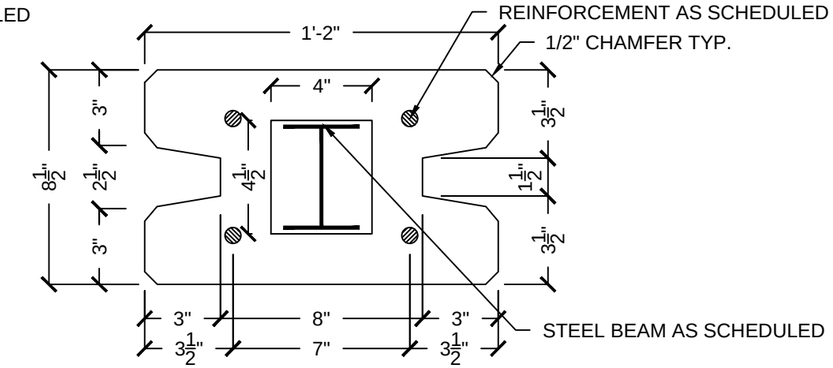

LINE POST DETAIL

SCALE: 2" = 1'-0"

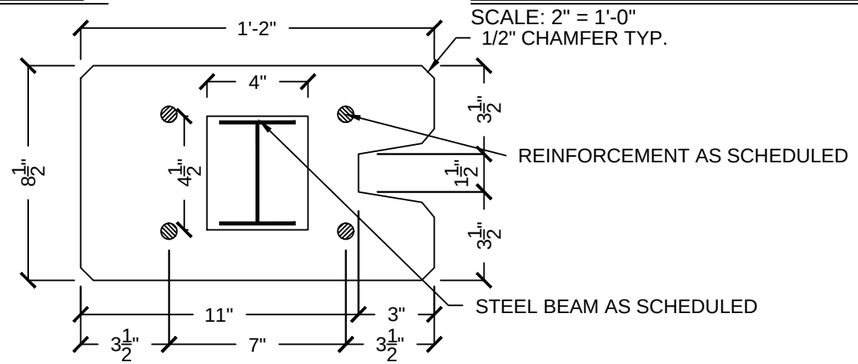

END POST DETAIL

SCALE: 2" = 1'-0"

SEE DRAWING 7 FOR MIDDLE AND END POST LAYOUT

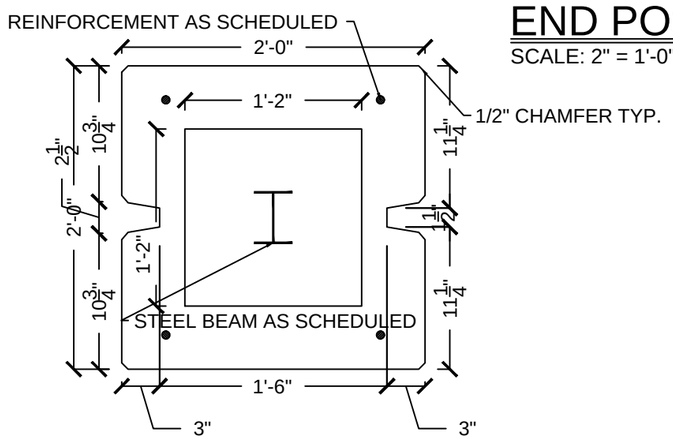

24x24 POST DETAIL

SCALE: 1" = 1'-0"

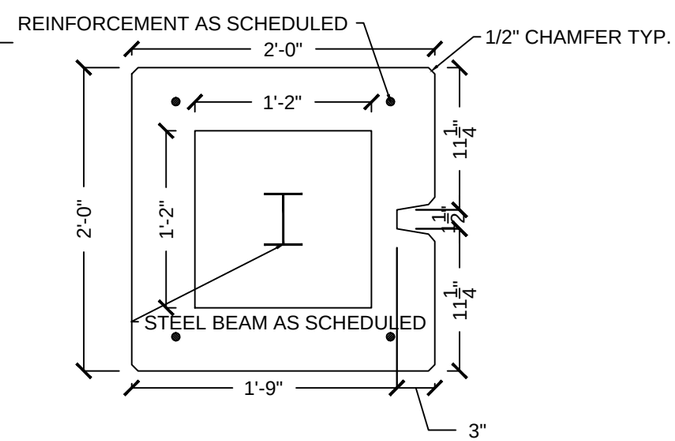

24x24 END POST DETAIL

SCALE: 1" = 1'-0"

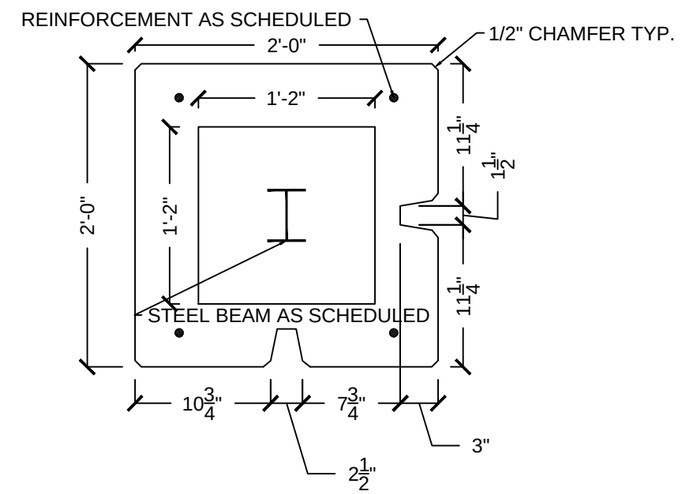

24x24 CORNER POST DETAIL

SCALE: 1" = 1'-0"

To the best of my knowledge, these drawings conform to the structural requirements of the 2010 Florida Building Code .

FOR APPROVAL NOT FOR CONSTRUCTION

Revisions	
1	
2	
3	

Florida Engineering Solutions
Today's Ideas * Tomorrow's Results
C.A. No. 26300 - 12620 Curley St. - Suite 105 - San Antonio, FL 33576
Ph: 352 / 588 - 5311 Fx: 352 / 588 - 5411 www.florida-engineer.com

PERMACAST PRECAST CONCRETE FENCE
6015 21st Street East
Bradenton, Florida
Ph: 941 / 256 - 6087
www.permacastwalls.com

Permacast Site Wall

DWG BY:	CHK:	Drawing 4 OF 7
DATE:	JOB NO.	

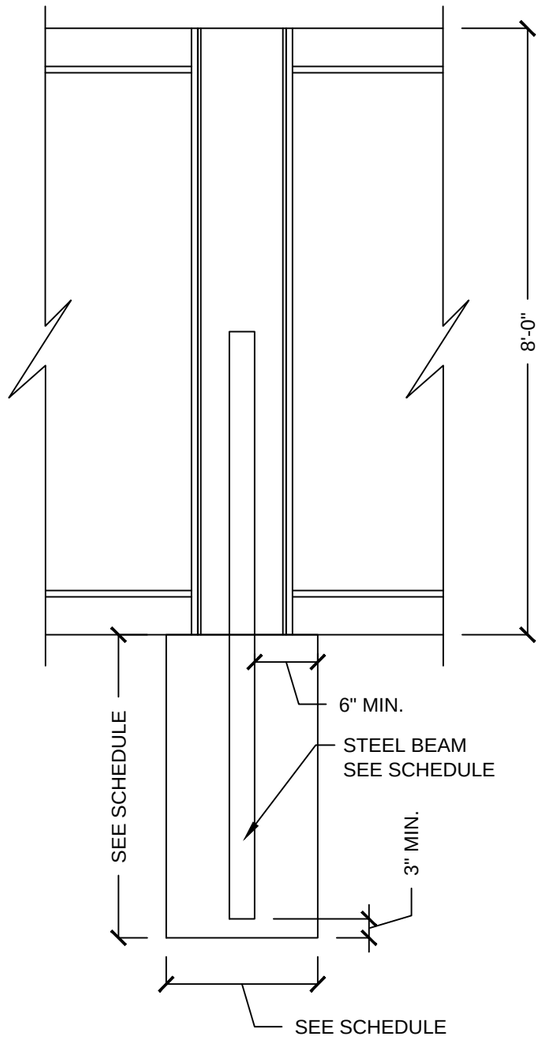

STEEL BEAM OPTION

TYPICAL FOUNDATION DETAIL

SCALE: 1/2" = 1'-0"

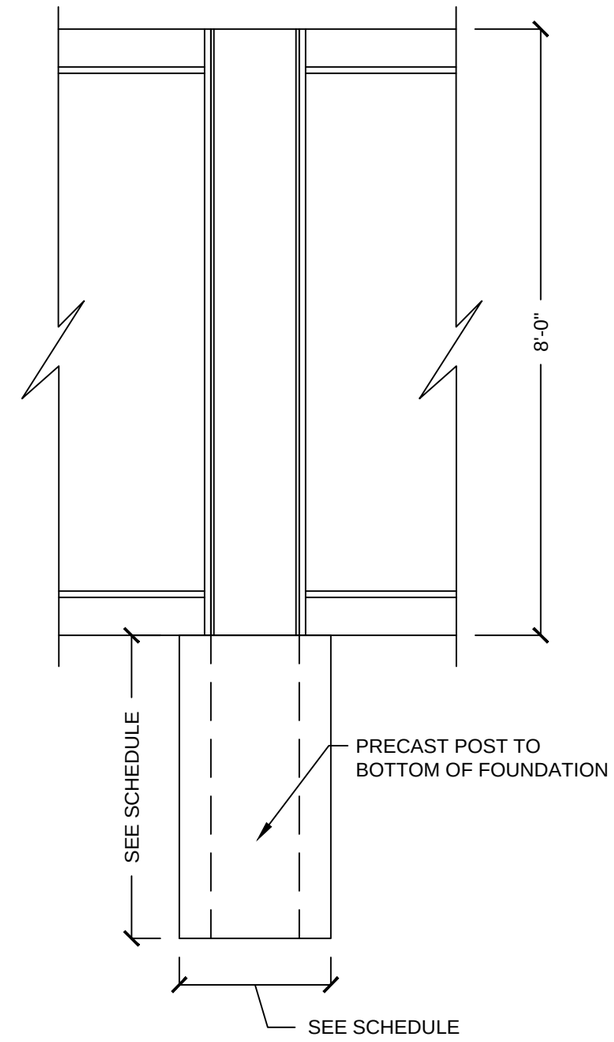

EMBEDDED POST OPTION

TYPICAL FOUNDATION DETAIL

SCALE: 1/2" = 1'-0"

SEE DRAWING 7 FOR MIDDLE AND END FOUNDATION LAYOUT

To the best of my knowledge, these drawings conform to the structural requirements of the 2010 Florida Building Code .

FOR APPROVAL NOT FOR CONSTRUCTION

Revisions	
1	
2	
3	

Florida Engineering Solutions
Today's Ideas * Tomorrow's Results
C.A. No. 26300 - 12620 Curley St. - Suite 105 - San Antonio, FL 33576
Ph: 352 / 588 - 5311 Fx: 352 / 588 - 5411 www.florida-engineer.com

PERMACAST PRECAST CONCRETE FENCE
6015 21st Street East
Bradenton, Florida
Ph: 941 / 256 - 6087
www.permacastwalls.com

Permacast Site Wall

DWG BY:	CHK:	Drawing 5 OF 7
DATE:	JOB NO.	

___FT WALL - ___ MPH - EXPOSURE ___

PERMACAST PRECAST PANEL REINFORCEMENT SCHEDULE			
	TOP BULB	BOTTOM BULB	WEB
MIDDLE WALL (WM)			6lb / CY FORTA FERRO FIBER
END WALL (WE)			6lb / CY FORTA FERRO FIBER

PERMACAST PRECAST POST REINFORCEMENT SCHEDULE		
	POST	STEEL BEAM
LINE POST MIDDLE WALL (PM)		N/A
LINE POST END WALL (PE)		N/A
END POST END WALL (PE)		N/A

PERMACAST CONCRETE FOUNDATION SCHEDULE		
	SIZE	DEPTH
MIDDLE WALL (FM)	24" DIA.	
	30" DIA.	
	36" DIA.	
END WALL (FE)	24" DIA.	
	30" DIA.	
	36" DIA.	

WALL SCHEDULES - EMBEDDED POST OPTION

SCALE: N.T.S.

___FT WALL - ___ MPH - EXPOSURE ___

PERMACAST PRECAST PANEL REINFORCEMENT SCHEDULE			
	TOP BULB	BOTTOM BULB	WEB
MIDDLE WALL (WM)			6lb / CY FORTA FERRO FIBER
END WALL (WE)			6lb / CY FORTA FERRO FIBER

PERMACAST PRECAST POST REINFORCEMENT SCHEDULE		
	POST	STEEL BEAM
LINE POST MIDDLE WALL (PM)		
LINE POST END WALL (PE)		
END POST END WALL (PE)		
24x24 POST MIDDLE WALL (PM)		
24x24 END POST END WALL (PE)		
24x24 CORNER POST END WALL (PE)		

PERMACAST CONCRETE FOUNDATION SCHEDULE		
	SIZE	DEPTH
MIDDLE WALL (FM)	24" DIA.	
	30" DIA.	
	36" DIA.	
END WALL (FE)	24" DIA.	
	30" DIA.	
	36" DIA.	

WALL SCHEDULES - STEEL BEAM OPTION

SCALE: N.T.S.

SEE DRAWING 7 FOR MIDDLE AND END WALL LAYOUT

To the best of my knowledge, these drawings conform to the structural requirements of the 2010 Florida Building Code .

FOR APPROVAL NOT FOR CONSTRUCTION

Revisions

1

2

3

Florida Engineering Solutions
Today's Ideas * Tomorrow's Results
C.A. No. 26300 - 12620 Curley St. - Suite 105 - San Antonio, FL 33576
Ph: 352 / 588 - 5311 Fx: 352 / 588 - 5411 www.florida-engineer.com

PERMACAST PRECAST CONCRETE FENCE
6015 21st Street East
Bradenton, Florida
Ph: 941 / 256 - 6087
www.permacastwalls.com

Permacast Site Wall

DWG BY:	CHK:	Drawing 6 OF 7
DATE:	JOB NO.	

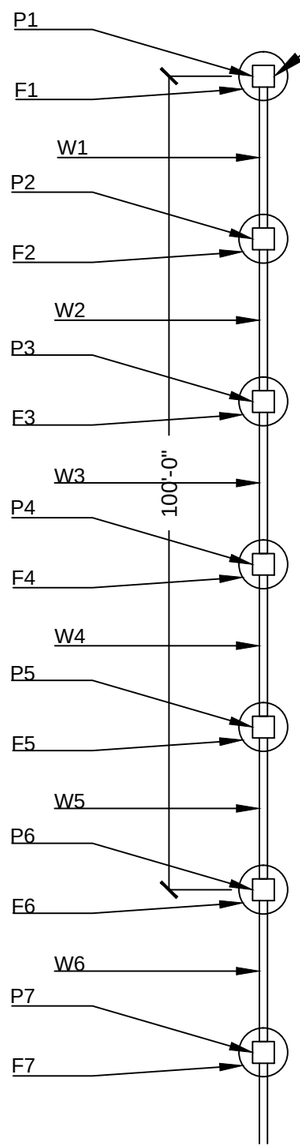

PERMACAST WALL PANEL TYPE SCHEDULE
WE = END OF WALL PANEL (SEE DRAWINGS)
WM = MIDDLE OF WALL PANEL (SEE DRAWINGS)

PERMACAST WALL HEIGHT (FT)

WALL TYPE (SEE DWG)	6FT	8FT	10FT	12FT		
W1	WE	WE	WE	WE		
W2	WE	WE	WE	WE		
W3	WE	WE	WE	WE		
W4	WM	WE	WE	WE		
W5	WM	WM	WE	WE		
W6	WM	WM	WM	WE		

PERMACAST PRECAST POST TYPE SCHEDULE
PE = END OF WALL POST (SEE DRAWINGS)
PM = MIDDLE OF WALL POST (SEE DRAWINGS)

PERMACAST WALL HEIGHT (FT)

POST TYPE (SEE DWG)	6FT	8FT	10FT	12FT		
P1	PE	PE	PE	PE		
P2	PE	PE	PE	PE		
P3	PE	PE	PE	PE		
P4	PE	PE	PE	PE		
P5	PM	PE	PE	PE		
P6	PM	PM	PE	PE		
P7	PM	PM	PM	PE		

PERMACAST FOUNDATION TYPE SCHEDULE
FE = END OF WALL FOUNDATION (SEE DRAWINGS)
FM = MIDDLE OF WALL FOUNDATION (SEE DRAWINGS)

PERMACAST WALL HEIGHT (FT)

FOUND. TYPE (SEE DWG)	6FT	8FT	10FT	12FT		
F1	FE	FE	FE	FE		
F2	FE	FE	FE	FE		
F3	FE	FE	FE	FE		
F4	FE	FE	FE	FE		
F5	FM	FE	FE	FE		
F6	FM	FM	FE	FE		
F7	FM	FM	FM	FE		

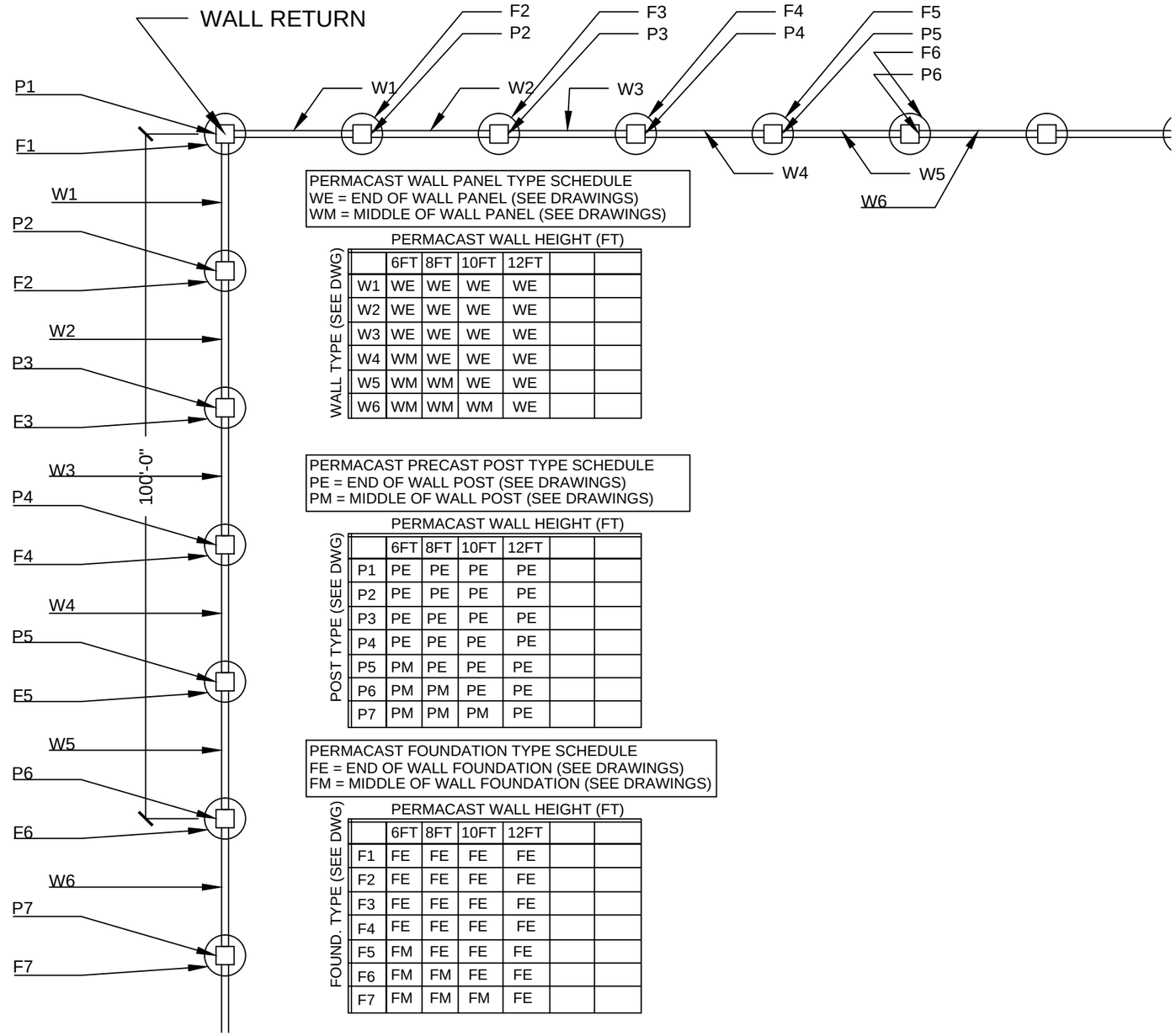

PERMACAST WALL PANEL TYPE SCHEDULE
WE = END OF WALL PANEL (SEE DRAWINGS)
WM = MIDDLE OF WALL PANEL (SEE DRAWINGS)

PERMACAST WALL HEIGHT (FT)

WALL TYPE (SEE DWG)	6FT	8FT	10FT	12FT		
W1	WE	WE	WE	WE		
W2	WE	WE	WE	WE		
W3	WE	WE	WE	WE		
W4	WM	WE	WE	WE		
W5	WM	WM	WE	WE		
W6	WM	WM	WM	WE		

PERMACAST PRECAST POST TYPE SCHEDULE
PE = END OF WALL POST (SEE DRAWINGS)
PM = MIDDLE OF WALL POST (SEE DRAWINGS)

PERMACAST WALL HEIGHT (FT)

POST TYPE (SEE DWG)	6FT	8FT	10FT	12FT		
P1	PE	PE	PE	PE		
P2	PE	PE	PE	PE		
P3	PE	PE	PE	PE		
P4	PE	PE	PE	PE		
P5	PM	PE	PE	PE		
P6	PM	PM	PE	PE		
P7	PM	PM	PM	PE		

PERMACAST FOUNDATION TYPE SCHEDULE
FE = END OF WALL FOUNDATION (SEE DRAWINGS)
FM = MIDDLE OF WALL FOUNDATION (SEE DRAWINGS)

PERMACAST WALL HEIGHT (FT)

FOUND. TYPE (SEE DWG)	6FT	8FT	10FT	12FT		
F1	FE	FE	FE	FE		
F2	FE	FE	FE	FE		
F3	FE	FE	FE	FE		
F4	FE	FE	FE	FE		
F5	FM	FE	FE	FE		
F6	FM	FM	FE	FE		
F7	FM	FM	FM	FE		

MIDDLE AND END WALL LAYOUT

SCALE: N.T.S.

To the best of my knowledge, these drawings conform to the structural requirements of the 2010 Florida Building Code .

FOR APPROVAL NOT FOR CONSTRUCTION

Revisions

1	
2	
3	

Florida Engineering Solutions
Today's Ideas * Tomorrow's Results
C.A. No. 26300 - 12620 Curley St. - Suite 105 - San Antonio, FL 33576
Ph: 352 / 588 - 5311 Fx: 352 / 588 - 5411 www.florida-engineer.com

PERMACAST PRECAST CONCRETE FENCE
6015 21st Street East
Bradenton, Florida
Ph: 941 / 256 - 6087
www.permacastwalls.com

Permacast Site Wall

DWG BY:	CHK:	Drawing 7 OF 7
DATE:	JOB NO.	

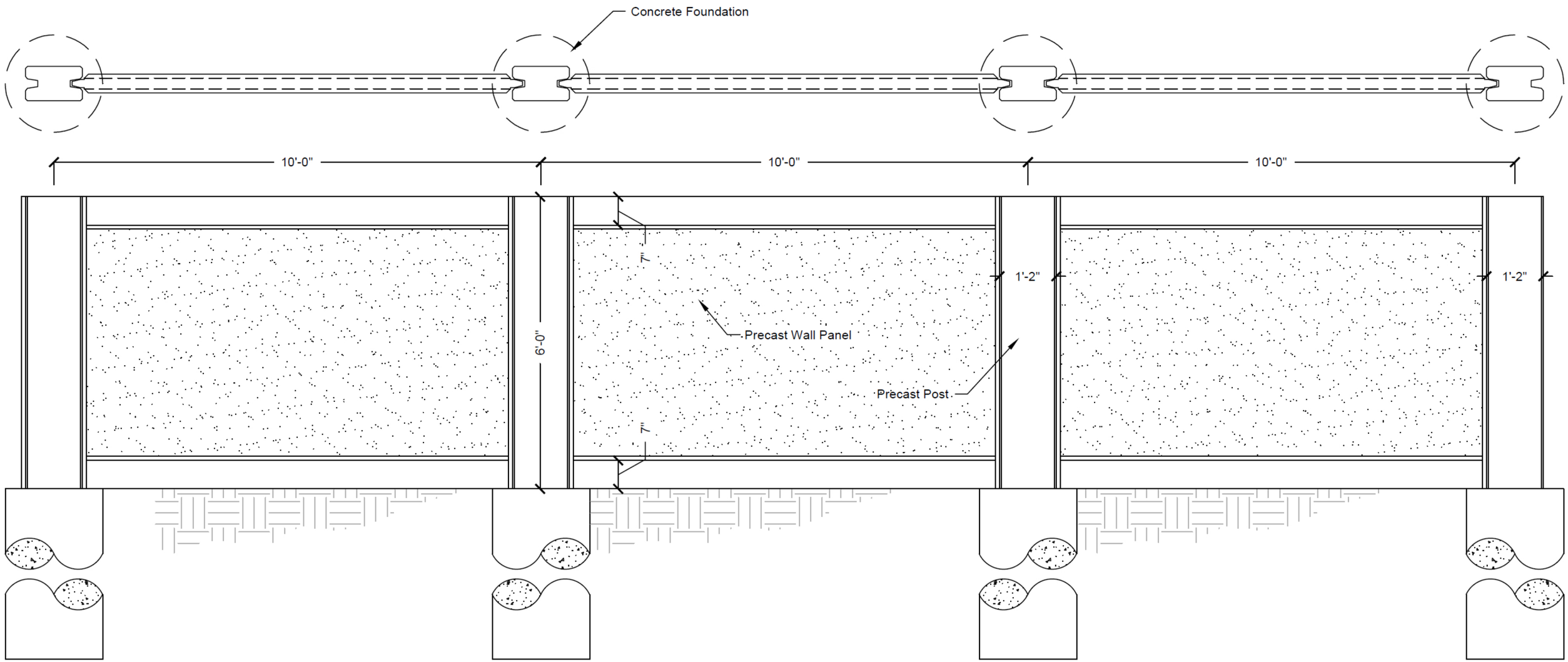

TYPICAL WALL ELEVATION

SCALE: 1/2" = 1'-0"

To the best of my knowledge, these drawings conform to the structural requirements of the 2010 Florida Building Code .

JOHN ASHBY HOY
LICENSE
No. 55312
March 26, 2015
STATE OF FLORIDA
PROFESSIONAL ENGINEER

Revisions	
1	
2	
3	

Florida Engineering Solutions
Today's Ideas * Tomorrow's Results
C.A. No. 26300 - 12620 Curley St. - Suite 105 - San Antonio, FL 33576
Ph: 352 / 588 - 5311 Fx: 352 / 588 - 5411 www.florida-engineer.com

PERMACAST
PRECAST CONCRETE FENCE
6015 21st Street East
Bradenton, Florida
Ph: 941 / 256 - 6087
www.permacastwalls.com

DWG BY:	CHK:	Drawing
DATE:	JOB NO.	